THRUST IT TO THE **MAX**

Hydraulic Tunnel Thruster

Series 325HYD

Model 325

With Electronic Controller

INSTALLATION OPERATION MAINTENANCE

Serial N° : ----------

Date of Installation : ----------

IT IS IMPORTANT TO KEEP THIS MANUAL ON BOARD!

Via Philips 5, 20900 Monza (MI), Italy

Tel. +39 039 200 1973-936 - Fax +39 039 2004299

www.max-power.com E-mail:contact@max-power.com

To ensure a proper installation, correct usage and long-lasting enjoyment of this equipment, please take time to read this manual thoroughly.

Table of Contents

Number	Description	Page
1	General Installation Guidelines	2
2	Tunnel	2-3
3	Propeller Drive Leg & Motor Support	3
4	The Hydraulic Motor and its Adapter	4
5	Propellers	4
6	Protection Grill	4
7	Hydraulic General Remarks	4-5
8	Hydraulic Specifications	5
9	Hydraulic Custom Pack	6
10	Maintenance	7
11	Notes	8
12	Spare Parts List	9
13	Spare Part Diagram	10
14	Control System Connections: Electro-Hydraulic Pump	11
15	Control System Connections: Motor with Clutched PTO	12
16	Super Power Hydraulic Diagram	13
17	Positioning and Measurements	14
18	Warranty Procedures	15-16
19	List of Distributors	17-18
20	Warranty Document (to be returned)	19

Your thruster is a high quality technical product and should be treated as such. The employment of **qualified marine personnel**, with experience in bow thruster installation, is strongly advised. Where possible, the boat manufacturer's architects, design departments and/or shipyards should be consulted, prior to installation taking place. For any boat requiring official classification, bodies of approval should also be consulted at the earliest opportunity. In any case, all other bodies, governmental or otherwise, should be contacted to ensure conformity with legal regulations relating to the boat in question.

Your thruster should be delivered with the following parts:

Hydraulic Motor & Coupling	Motor Support	Controller HYD	Drive Leg, Propeller Pin(s) & Coupling
Propellers (2)	Safety Stickers x 2	Manual	

1) GENERAL INSTALLATION GUIDLINES

Decide on the best location for the SUPER POWER. (See drawing: "Positioning & Measurements" at back of manual).
The tunnel must be as low as possible and as far forward as possible.
The propellers must not protrude beyond the hull line.
The ideal position of the tunnel is such that there is at least the depth of one tunnel diameter from the water line to the top of the fitted tunnel. Decreased performance of the SUPER POWER due to inadequate immersion depth can be compensated by fitting the tunnel as far forward as possible (increasing lever arm movement).
The SUPER POWER hydraulic thrusters can be fitted vertically, horizontally or tilting.

IMPORTANT: When using tunnels of different thickness (example: metallic tunnel) it is imperative that the area between the drive leg/gasket and the motor support, matches the thickness as indicated in the table on the drawing "Positioning & Measurements" at back of manual and that the motor support is stable.
If you have less than 8 mm thickness, you will require an extra hard rubber gasket between the motor support and the tunnel.

2) TUNNEL

When the final tunnel position is determined (and all dimensions have been checked), mark the centre of the tunnel's position and drill a Ø 10 mm hole. Make up a metal compass from 8 mm rod.

Fit compass into the Ø 10 mm holes and trace the form of the tunnel on to the hull (elliptical).
After cutting out the elliptic hole, disc the interior surface of the hull, by approx. 10 to 15 cm around the holes.
The outside surface of the tunnel is then ready to be fibre-glassed.

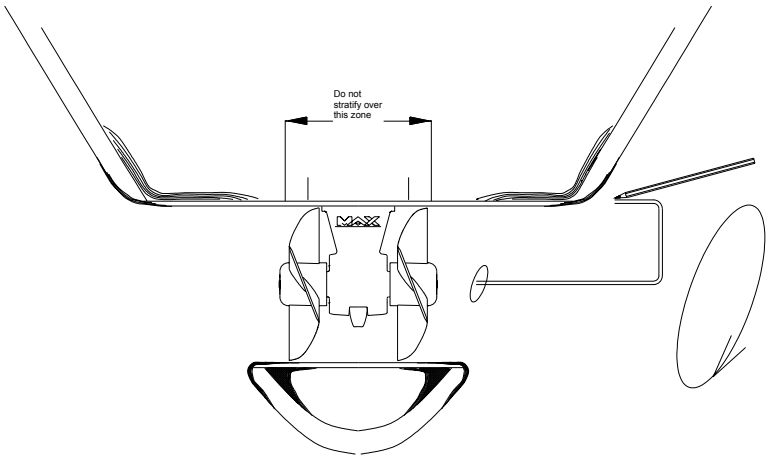

Fit the tunnel and mark the areas to be fibre-glassed. Sand these areas inside and out.
In certain installations it is preferable to drill the position of the thruster support before the installation of the tunnel.
Refit the tunnel. Apply reinforced fibreglass filler to all areas, taking care that you fill the gap between hull and tunnel. Stratify with a minimum of 8 coats of material and ISOPHTALIQUE RESINE alternating with mat and roving.
In inaccessible areas (i.e. under the tunnel), it is possible to simply apply reinforced filler.

CAUTION: Do not fibre glass the area of the motor support.
It is recommended to lightly sand down the area where the motor support is fitted.

On the outside, when the ISOPHTALIQUE RESIN has set, finish with an application of resin and material, followed with an additional coat on the hull, in the tunnel area.
To optimise the flow of water while sailing, deflectors & a relief should be fashioned.
These can be made up with several coats of reinforced filler in order to obtain the required hydrodynamic lines.

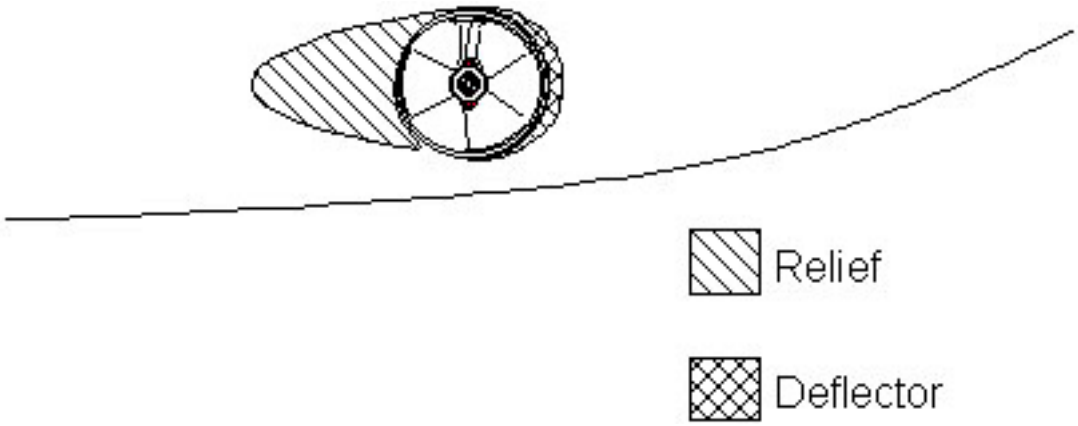

Once all fibreglass work is complete, apply a coat of epoxy or gel-coat to waterproof the entire area.

3) PROPELLER DRIVE LEG & MOTOR SUPPORT

The leg's gasket and the motor's support can be used to mark up the drilling position, in some cases it might be easier, to mark out the position, and drill before the stratification of the tunnel.
Centre and trace the drilling positions for the leg and its support.
Fit the leg along with the gasket, in the tunnel.
Check general positioning of the propellers.
Small pieces of folded cardboard can be used to check the spacing between the propeller tips and the tunnel is even all round. Slight adjustment to align the leg in its tunnel may be necessary.
After checks, remove leg etc; remount the assembly, covering the gasket with an oil and salt water resistant jointing compound. After fitting, remove all excess compound.
The gasket must be between the leg and the tunnel, and not between the motor support and the tunnel.
Care must be taken at all times when fitting the leg into the motor support to ensure that the mating components are dirt free and covered with a light film of grease.

IMPORTANT: GRAPHITE GREASE MUST NOT BE USED.

Torque values: screw Ø 12 mm = 80 Nm screw; tighten the two fixing screws alternately.

Once tightened, ensure that the propeller/s turn freely without touching the tunnel.

4) THE HYDRAULIC MOTOR AND ITS ADAPTER

Do not separate the motor from its adapter.
Insert the lower drive coupling onto the leg drive shaft (lightly grease the shaft before doing this).
Position the red plastic coupling (piece n° 10 on "Spare Part Diagram") onto the lower coupling.
Before tightening the 2 x 6 mm Allen fixing screws of the lower coupling, make sure that coupling is pushed all the way down on drive leg shaft.
Then position the motor and tighten the 4 x 10 mm to 40Nm.

IMPORTANT: Please note that the above coupling might need to be adjusted if any other tunnel than a Max Power tunnel (thickness 9mm) is used.
The top and bottom coupling pieces should fit tightly together to ensure maximum gripping between them.

Check that the propellers turn freely and that there is no tight spot. A certain amount of resistance is normal from the motor. When all is assembled recheck the tightness of all the motor bolts.

NOTE: The coupling on the motor side is in place when delivered, do not touch this.

5) PROPELLERS

Check the tightness of the oil drain screw (8 mm Allen Key) and the anode (a 10 mm key).

IMPORTANT: To prevent limestone deposits from forming (causing damage to the joints), we highly recommend applying silicone grease to the shaft and the joints before assembling the propellers.

Fit the fixing pins and propellers

NOTE: Position the propeller blades opposed and not in line with one another.

Make sure that the propellers turn freely. A certain amount of resistance from the motor is normal.
Tighten the 24 mm nuts on each propeller to 27 Nm.
Ensure correct protection of hands against the propellers blades.

6) PROTECTION GRILLS

With a shallow tunnel installation, we recommend that you protect the propellers by fitting horizontal protection grills. These grills will however modify thruster performance.

7) HYDRAULIC (general remarks)

A typical installation of the hydraulic power thruster requires the following elements:

- oil reservoir/tank
- hydraulic pump
- directional control valve
- hydraulic motor
- circuit piping
- oil cooler (depending on type of installation)

The **oil reservoir/tank** with return filter and suction strainer should be as close to the pump as possible and on charge. Meaning that the level of the oil should be above the pump, preferably with the oil tank above the water line.
For future maintenance, make sure that the return filter is easily accessible. An isolation valve can be fitted to the suction.

The **pump** can be driven by either an internal combustion engine (crankshaft pulley or gearbox PTO) or an electric motor. Depending on the speed and choice of drive, **but** should always comply with the rated pressure/flow of the thruster.

For an **internal combustion engine** with fixed or variable speed, 3 types of pumps can be used, depending on the unit to be fitted:

Direct PTO:
- Fixed flow pump **(***)**
- Variable displacement pump, depending on the model **(**) (*)**
- Fixed flow pump with bypass **(**) (*)**

PTO with clutch:
- Fixed flow pump **(**) (*)**
- Variable displacement pump depending on the model **(**) (*)**
- Fixed flow pump with bypass **(**) (*)**

On a DC or AC **electric motor** the following types of pumps can be used:

DC MOTOR:
- Fixed flow pump **(*)**

AC MOTOR:
- Fixed flow pump or other **(**) (*)**

(***) **always** require oil cooler
(**) require oil cooler when time of operation exceeds 15 minutes,
(*) oil cooler not necessary
Note: The above choices also depend on capacity of the oil tank etc.

The **hydraulic directional control valve (DCV)** must be equipped with a pressure gauge and pressure relief valve and should preferably be placed as close as possible to the thruster unit.

The piping can be flexible or a mix of rigid and flexible type and should have crimp-connected fittings.
The piping should match interior diameters and the service pressure equal or above that which has been recommended.
The circuits must be as direct as possible and avoid any bends and joints.
The circuits must be clean and closed-off until final connection takes place.
The thruster hoses arriving at the thruster must be of the thermo-plastic non-conductive type.
The hydraulic motor drain line and the return T-line of the DCV should each go separately and directly, back into the top of the oil tank.
Use synthetic, mineral or vegetable hydraulic **oil,** to ISO standard 32 to 48

8) HYDRAULIC SPECIFICATIONS

SUPER POWER Series 325HYD Model 325: Flow =38/45 litres/Min; Pressure =210/240 bars

Detailed **instructions** and **diagrams** are delivered with each **pack,** specific to the installation chosen.

9) HYDRAULIC CUSTOM PACK.

Tailor made according to specifications.

ELECTRO PUMP PACK: 2 x Electro Pump 24Volt
2 x Power Relay
2 x Fuse Holder
2 x Power Fuse
2 x Check Valves

HYDRAULIC CONTROL PACK (12 V / 24 V):
1 Directional Control Valve (Including pressure gauge & Pressure Relieve Valve)
1 Control Panel.

RESERVOIR PACK
Oil Reservoir 12 / 18 / 40 litres including: Return Filter
Suction Strainer
Oil Level Sight Gauge/ Thermometer
Filler Cap
Motor Drain Connection

INTERIOR DIAMETERS AND MODULES of the piping between the hydraulic elements:
M4 = 1/4'' M5 = 5/16'' M6 = 3/8'' M8 = 1/2''
M10 = 5/8'' M12 = 3/4'' M16 = 1''

INTAKE DIAMETERS of standard hydraulic elements MAX POWER:
1 / 2 / 11 = Female **BSP 3/4''** 3 / 6 / 7 / 8 / 9 / 13 = Female **BSP 1/2",**
4 / 5 = Female **BSP 3/8"** 10 / 12 = Female **BSP 1/4"**

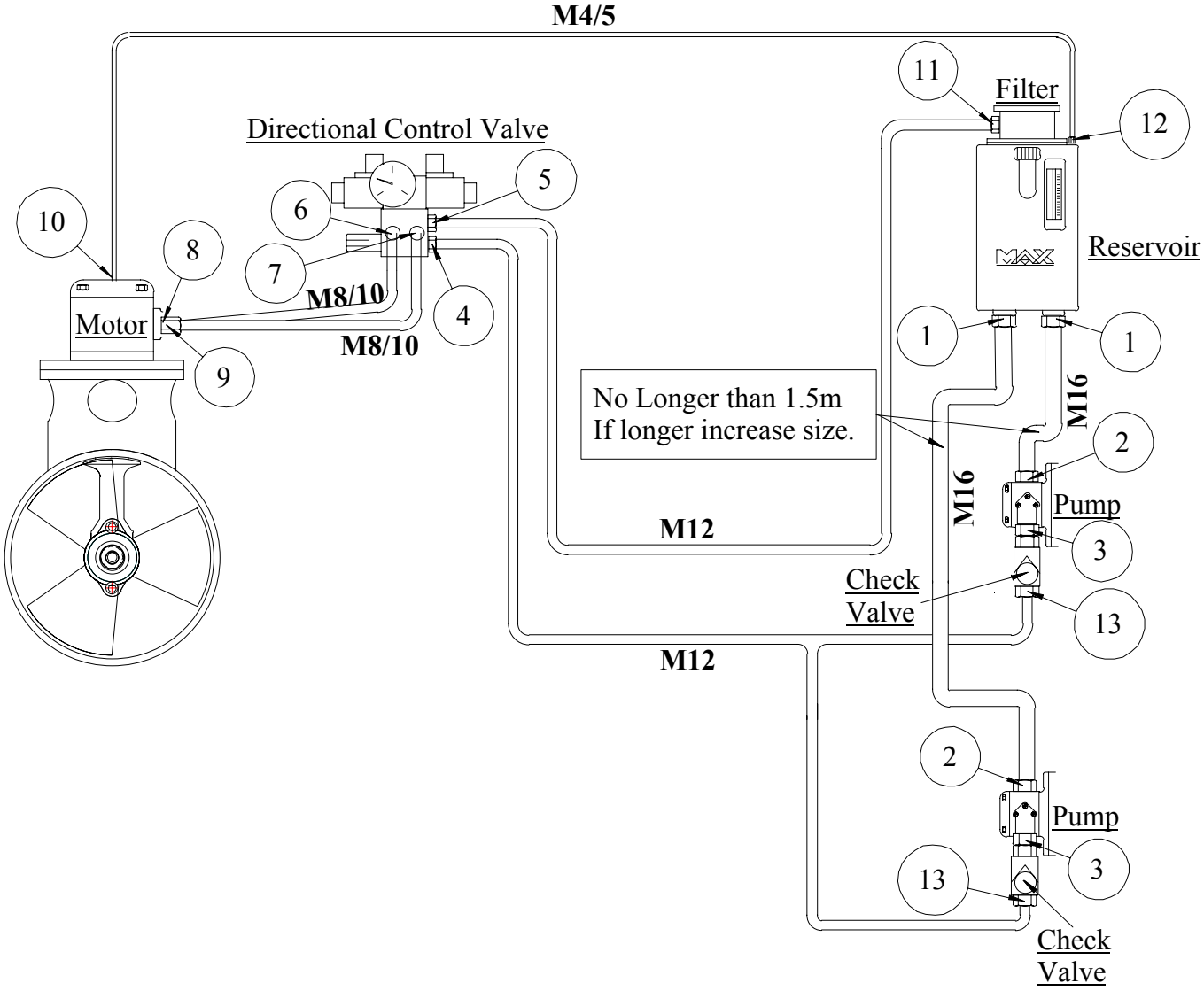

10) MAINTENANCE

In order to ensure peak performance from your SUPER POWER, the tunnel, the leg and the propellers must be kept clean.

IMPORTANT: In order to prevent chalky deposits, which cause damage to the oil seals, we recommend cleaning the shaft and the oil seals first, then applying a layer of silicon oil before assembling the propellers.

ANNUAL BASIS: CHANGE the anode (if necessary).
CHANGE drive leg oil, if classic (bronze) leg.
CHECK the oil and the hydraulic filtration circuit (only if necessary).

EVERY 5 YEARS: DRAIN hydraulic oil system and change the filter and refill.

THE MAX-POWER TEAM WISHES YOU SUCCESSFUL MANOEUVRING AND ENJOYABLE CRUISING.

IT IS IMPORTANT TO KEEP THIS MANUAL ON BOARD!

Installation Notes

SUPER POWER, Series 325 HYD Model 325

N°	DESIGNATION	Classic MPHY 3155	REFERENCES
3	Hydraulic motor plate fixing bolts	4	MPOP5240
4	Hydraulic motor	1	MPHY6000
5	Hydraulic motor adapter plate	1	MPHY5012
8,9,10	Complete Coupling Kit	1	MPOP5127
11	Drive key	1	MP205035
13	Motor support 325	1	MP205020
16	Drive shaft oil seal	1	MP205038
17	Drive shaft	1	MP205040
18	Upper ball bearing	1	MP205045
19	Lower ball bearing	1	MP205050
20	Drive gear	1	MP2050001
21	Clip	1	MP205002
22	Leg fixing screws	2	MP204000
23	Fibre joint leg/tunnel	1	MP205055
24	Leg housing	1	MP205060
25	Propeller ∅ 315	2	MP205015
26	Propeller nut	2	MP204005
27	Propeller drive pin	2	MPOP5530
28	Oil seal	2	MP205065
29	Screw cap	4	MP204010
30	Propeller shaft	1	MP205070
31	Propeller shaft key	1	MP205035
32	Propeller shaft gear	1	MP205006
33	Shims (set of 1mm)	2	MP205080
34	Propeller shaft ball bearing	2	MP205085
35	O-ring cap	2	MP205090
36	Cap	2	MP205095
37	Copper washer	1	MPOP2050
38	Drain plug	1	MPOP 5300
39	Anode	1	MPOP5390
40	Anode screw	1	MPOP5311

SUPER POWER
SERIES 325 HYD

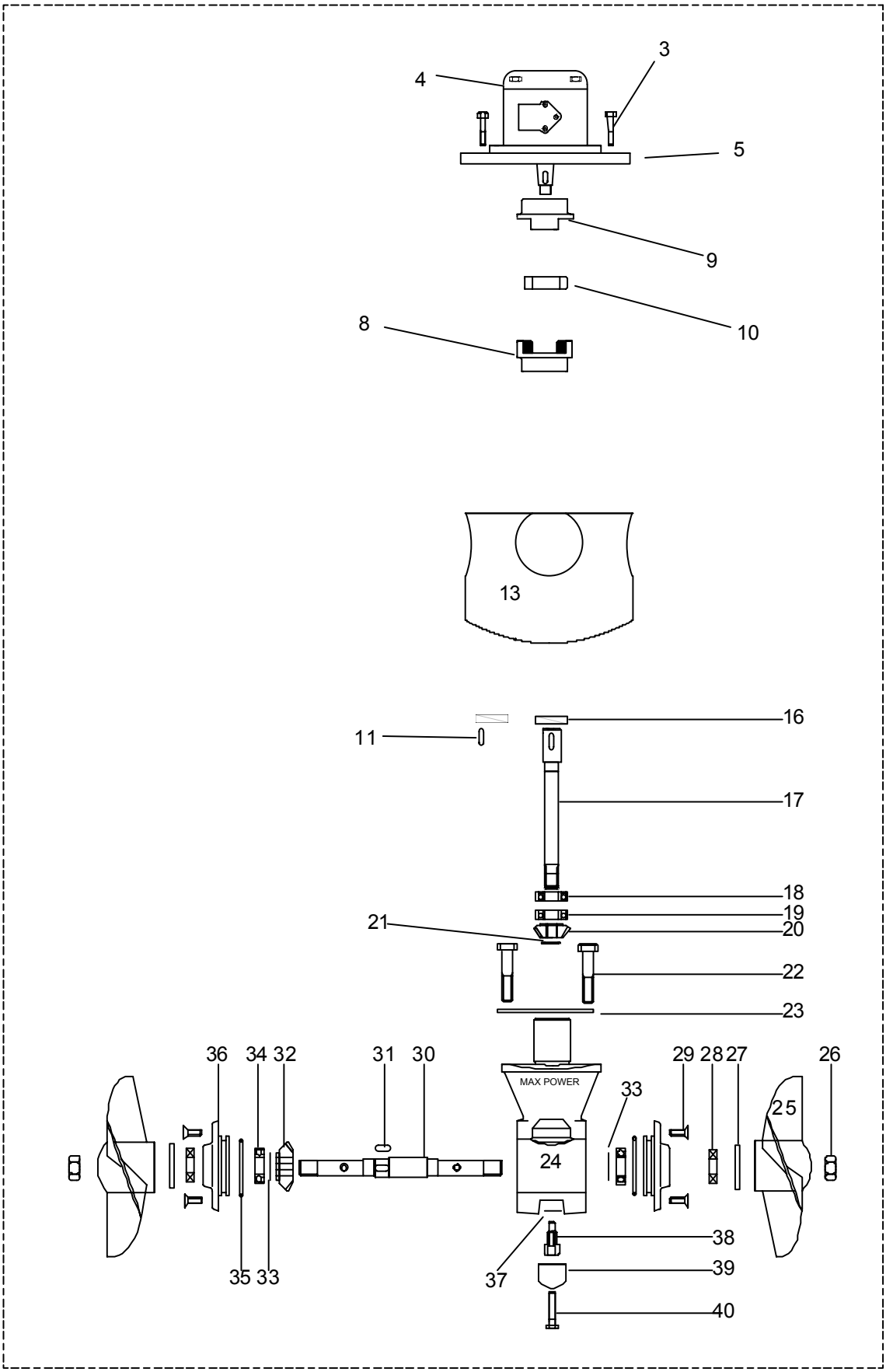

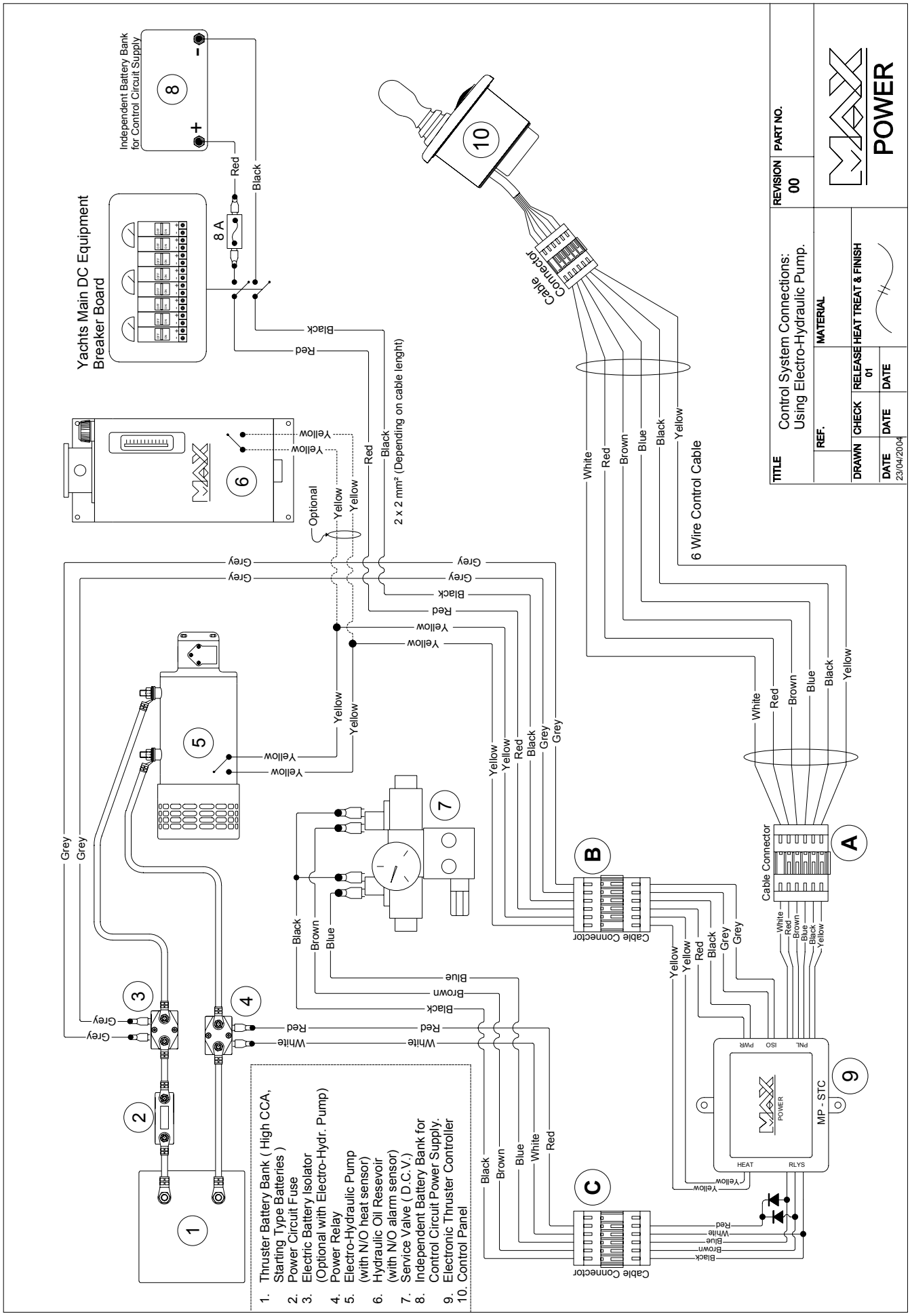
Independent Battery Bank for Control Circuit Supply
Yachts Main DC Equipment Breaker Board
8 A
Red
Black
Cable Connector
6 Wire Control Cable
White
Red
Brown
Blue
Black
Yellow
2 x 2 mm² (Depending on cable lenght)
Optional
Yellow
Grey
Cable Connector
MP - STC
POWER
HEAT
RLYS
PWR
ISO
PNL
1. Thruster Battery Bank (High CCA, Starting Type Batteries)
2. Power Circuit Fuse
3. Electric Battery Isolator (Optional with Electro-Hydr. Pump)
4. Power Relay
5. Electro-Hydraulic Pump (with N/O heat sensor)
6. Hydraulic Oil Resevoir (with N/O alarm sensor)
7. Service Valve (D.C.V.)
8. Independent Battery Bank for Control Circuit Power Supply.
9. Electronic Thruster Controller
10. Control Panel
TITLE
Control System Connections: Using Electro-Hydraulic Pump.
REVISION 00
PART NO.
REF.
MATERIAL
DRAWN
CHECK
RELEASE 01
HEAT TREAT & FINISH
DATE 23/04/2004
DATE
DATE
POWER

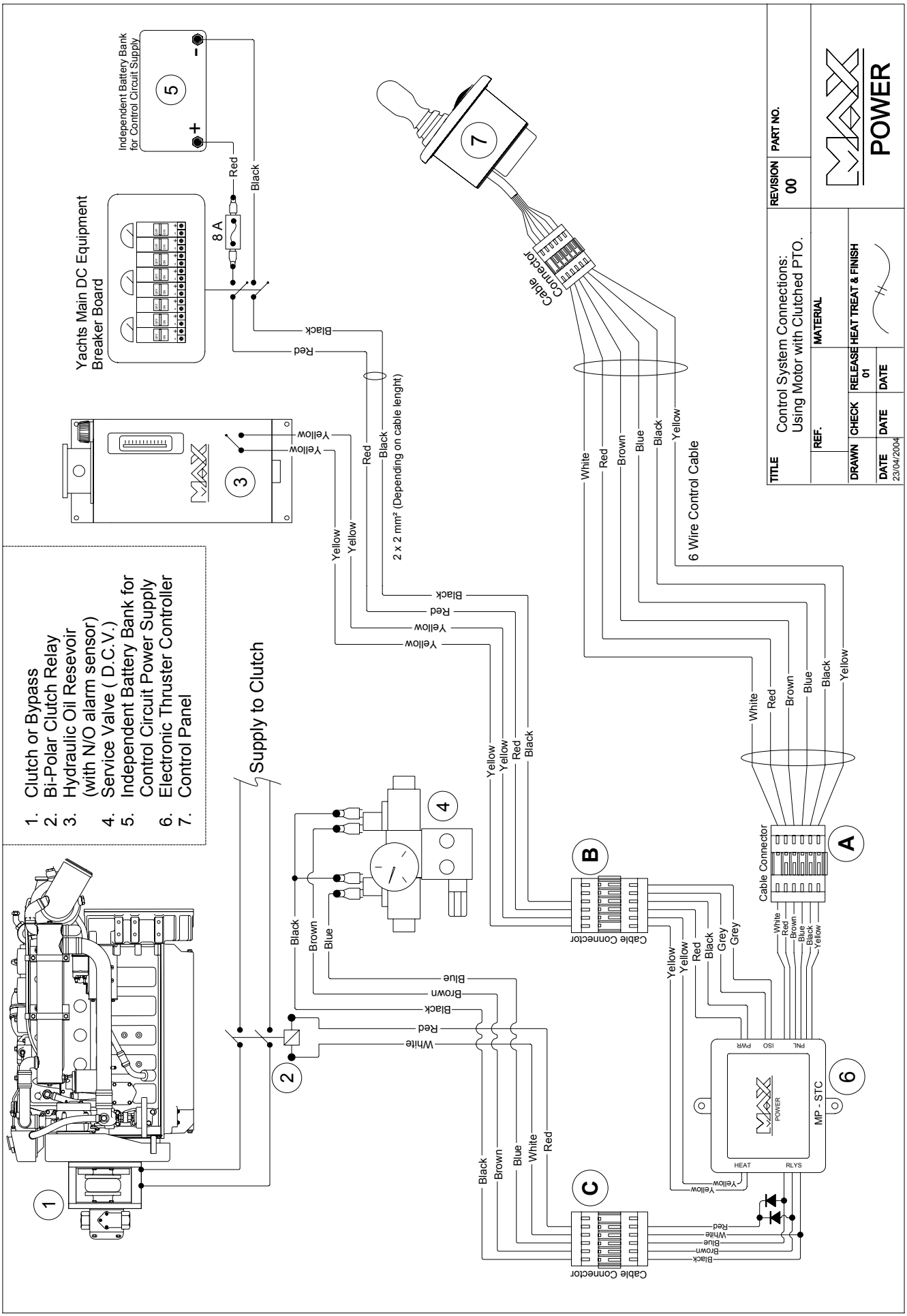
1. Clutch or Bypass
2. Bi-Polar Clutch Relay
3. Hydraulic Oil Resevoir (with N/O alarm sensor)
4. Service Valve (D.C.V.)
5. Independent Battery Bank for Control Circuit Power Supply
6. Electronic Thruster Controller
7. Control Panel
Independent Battery Bank for Control Circuit Supply
Yachts Main DC Equipment Breaker Board
8 A
Red
Black
Supply to Clutch
2 x 2 mm² (Depending on cable lenght)
Cable Connector
6 Wire Control Cable
Cable Connector
MP - STC
HEAT
RLYS
PWR
ISO
PNL
TITLE
Control System Connections: Using Motor with Clutched PTO.
REVISION
00
PART NO.
REF.
MATERIAL
DRAWN
CHECK
RELEASE
01
HEAT TREAT & FINISH
DATE
23/04/2004
DATE
DATE
POWER

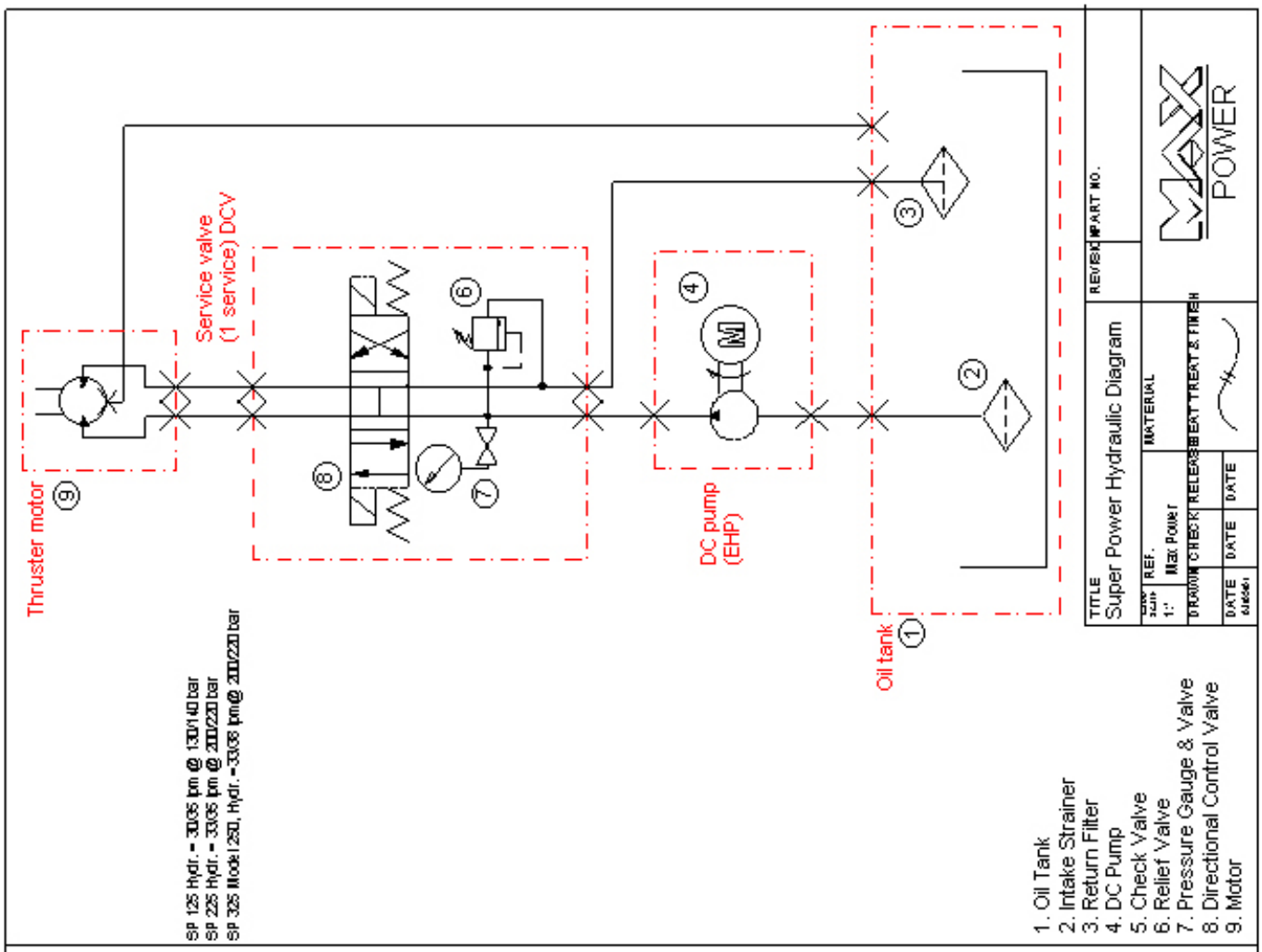
Thruster motor
Service valve
(1 service) DCV
DC pump
(EHP)
Oil tank
SP 125 Hydr. - 30/35 lpm @ 130/140 bar
SP 225 Hydr. - 33/35 lpm @ 200/220 bar
SP 325 Model 250, Hydr. - 33/38 lpm @ 200/220 bar
1. Oil Tank
2. Intake Strainer
3. Return Filter
4. DC Pump
5. Check Valve
6. Relief Valve
7. Pressure Gauge & Valve
8. Directional Control Valve
9. Motor
TITLE
Super Power Hydraulic Diagram
REF.
Max Power
MATERIAL
DRAWN
CHECK
RELEASE
DATE
REVISION
PART NO.
MAX POWER

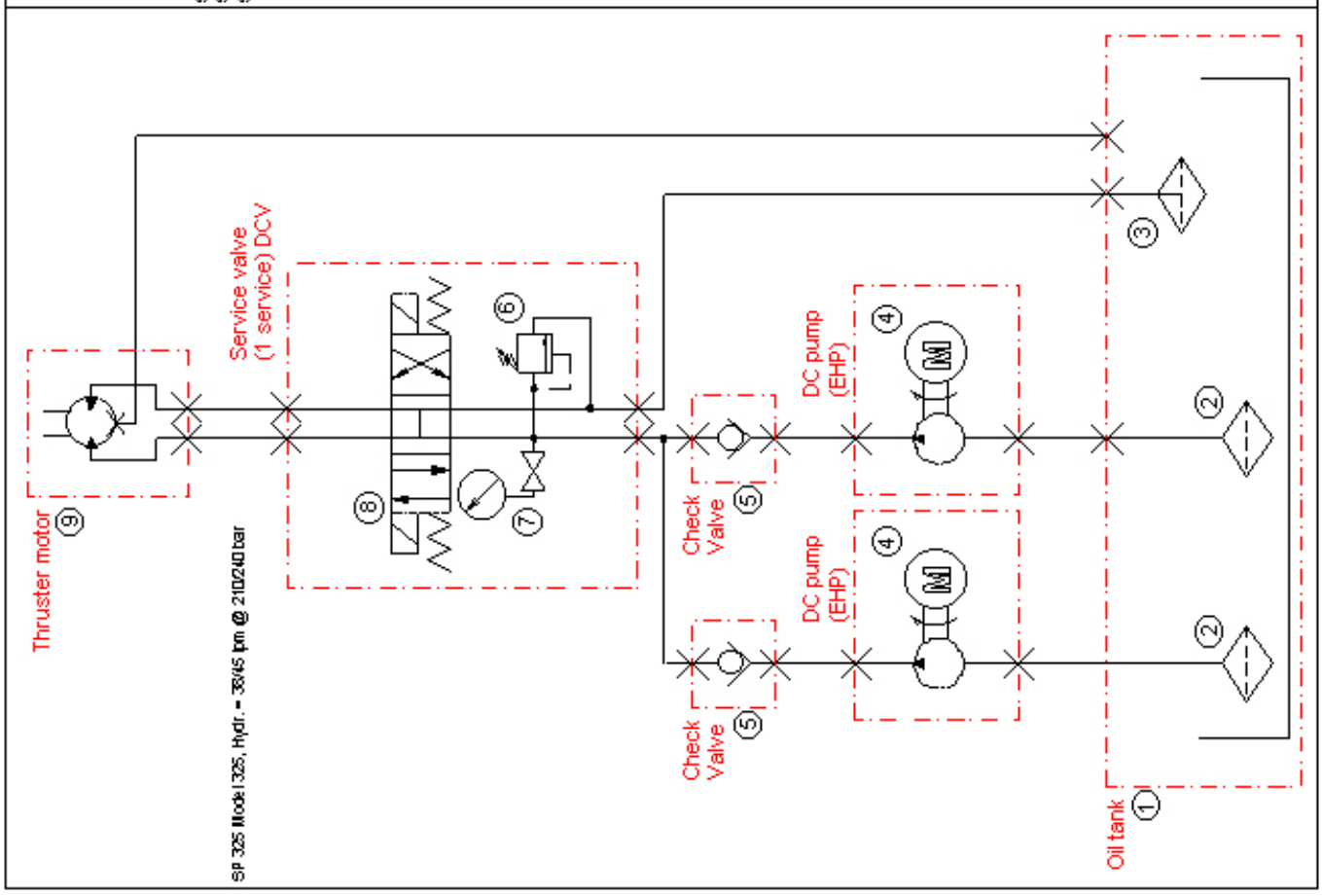
Thruster motor
Service valve
(1 service) DCV
Check
Valve
DC pump
(EHP)
Check
Valve
DC pump
(EHP)
Oil tank
SP 325 Model 325, Hydr. - 33/45 lpm @ 210/240 bar

Super Power Hydraulic: Positioning and Measurements

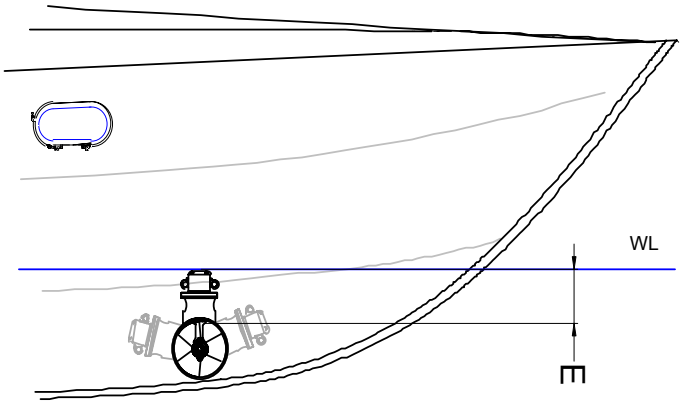

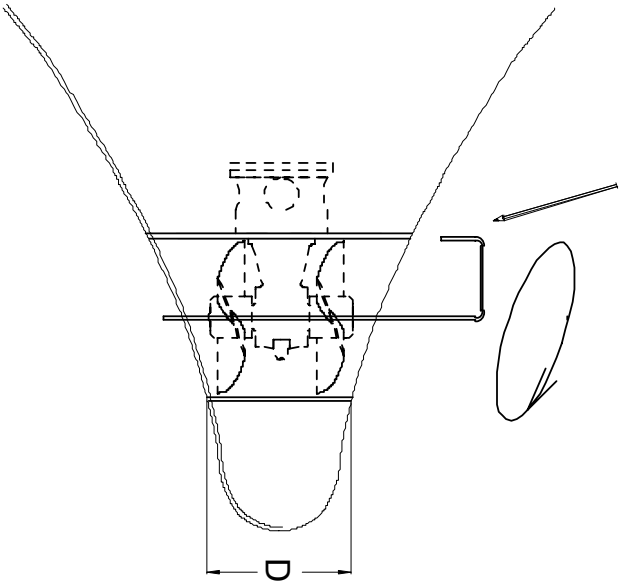

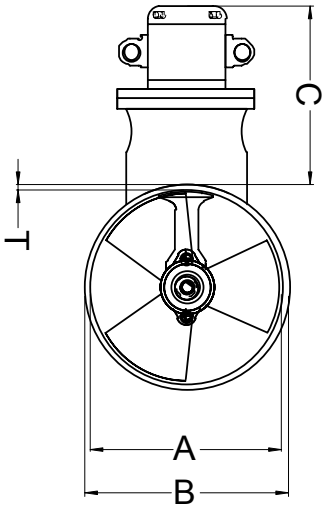

Dim (mm) \ Model	125	225	325
A	185	250	315
B	197	264	333
C	210	210	220
D	190	220	280
T	6	7	9
E Ideal	185	250	315
E Mini	110	140	160
Weight	9 Kg	12 Kg	20 Kg

WARRANTY COVERAGE

Introduction

The purpose of this document is to set out the terms of warranty cover offered in relation to products purchased by the End User from Max Power or its approved network of resellers. This document will adhere to the following format: -

Section 1 Definitions
Section 2 Period of Coverage
Section 3 Warranty Registration
Section 4 Warranty Terms
Section 5 Warranty Exclusions
Section 6 Procedural Guidelines
Section 7 Service Centres

Authorized Repair Number – The number given by Max Power on reporting a fault with your thruster
Dealer – An authorized Max Power sales centre
End User – The boat supplied with supplied equipment and the owner thereof
Installer – The authorized centre responsible for the installation of your thruster
Manufacturer – supplier of the equipment under warranty
Pleasure Craft – Vessels used for owner's personal use that have no commercial use (i.e. Charter boats or work boats)
Resellers – Max Power approved distributors and dealers
Serial Number – Number in upper right hand corner of Warranty document
Supplier – The manufacturer (Max Power)
Warranty – The terms and conditions that are covered by the manufacturer

2) Period of Coverage

The equipment manufactured by the Supplier is guaranteed to be free from defective workmanship, components and materials under normal usage conditions for a period of two years from the date of purchase by the End User. This warranty is transferable to subsequent owners of this equipment during the period of coverage.

3) Warranty Registration

Register your purchase now to receive free extended warranty coverage. This can be done using one of the following methods (NB. proof of purchase must be included to establish that equipment is still under warranty):

a) The quickest and easiest method to register your warranty is to fax the attached installation check list and warranty registration to the Manufacturer (Fax: +33 4 92 19 60 61)
b) Mail in your warranty registration document; please ensure that you make a copy before sending it. (10 Allée F Coli, 06210 Cannes-Mandelieu, France)

Warranty Document Cont.

4) Warranty Terms

If the material is used for anything other than for pleasure craft, the guarantee is limited to a six-month period.

Year 1 - All factory testing, diagnosis, repairs and replacements are performed at no charge to the End User. All parts and up to two hours of labour are covered for repairs and replacements conducted in the field.

Year 2 - All factory testing, diagnosis, repairs and replacements are performed at no charge to the End User. This excludes any damage or faults occurring from normal wear and tear on the following items: engine, oil seals, relay contacts (If warranty is registered within the 3 month period following installation)

5) Warranty Exclusions

Damage due to modifications or installation contrary to published specifications
Cost of hauling the boat
Damage due to repairs performed by an unauthorized service centre
Damage due to lack of normal maintenance services
Damage due to water
Parts replaced due to normal wear and tear
Repairs performed without knowledge of manufacturer (please contact dealer to receive Repair Authorization Number)
Tampering of equipment by the End User
Cost of travel to and from the job site
Cost of economic loss, including injury to any person, damage to property, loss of income or profit, communication, lodging, inconvenience
Consequential damage due to failure, including those arising from collision with other vessels or objects

6) Procedural Guidelines

PLEASE VIEW THE TROUBLE SHOOTING LIST TO ASCERTAIN OR SOLVE ORIGIN OF PROBLEM PRIOR TO CONTACTING THE DEALER/INSTALLER

1) Contact your dealer/installer to report the problem.
   a. If you do not know who this is contact the nearest Max Power distributor
   b. If you are in foreign waters please contact the nearest Max Power distributor
2) Ensure you have your serial number and model number to hand (top right hand corner of warranty)
3) Dealer/Installer will come to site to decipher the cause of the fault
4) If the cause of fault is due to a manufacturing problem the dealer will contact Max Power to receive Repair Authorization Number.
5) If the problem is due to an installation error please contact your installer.

IF POSSIBLE: PLEASE TAKE PHOTOGRAPHS OF THE THRUSTER TO SHOW PROBLEM

The warranty as outlined above is only applicable to Max Power manufactured thrusters and optional equipment as used in marine pleasure industry. The supplier holds the exclusive right to test the product and determine whether it is defective.

DISTRIBUTER CONTACT LIST:

SOUTHERN EUROPE:

CYPRUS OCEAN MARINE EQUIPMENT LTD Limassol Tel: + 357 53 69 731 Fax: + 357 53 52 976 Email: oceanm@spidernet.com.cy	**CYPRUS** TUTI MARE TRADING Limassol Tel: + 357 25 431 313 Fax: + 357 25 431 300 Email: tutimare@cytanet.com.cy
FRANCE ACCASTILLAGE BERNARD Cannes La Bocca Tel: + 33 493 90 47 47 Fax: + +33 5 46 45 49 53 Email: t.barrez@accastillage-bernard.fr	**GREECE** ALEX MARINE Piraeus Tel +30 10 41 29 539 Fax: + 30 10 41 12 932 Email: alexmarine@otenet.gr
ITALY Siemens VDO Trading srl via Vialba, 50 20026 Novate Milanese (MI) Tel: + 39 02 3568 04 81 Fax: + 39 02 35680325 info.soem@siemensvdo.com	**PORTUGAL** PLASTIMO PORTUGAL (SIROCO) Lisbon Tel: + 351 21 362 04 57 Fax: + 351 21 362 29 08 Email: plastimo@siroco-nautica.pt
SPAIN ACASTIMAR Cambrils Tarragona Tel: + 349 77 36 2118/9074 Fax: + 349 77 36 2687 Email: acastimar@acastimar.com	**TURKEY** EGEMAR Tuzla - Istanbul Tel:+90 216 494 21 68 Fax:+90 216 494 22 18 Email: sales@egemar.com
CROATIA ANORTI ADRIA Mirosevecka c 122, Zagreb Tel: +385 98 1896 770 Fax: +385 23 386 075 Email: info@anortiadria.hr	**SLOVENIA** ANORTI Kavciceva 66 Ljubljana Tel: +386 1 544 6436 Fax: +386 1 544 6435 Email: info@anorti.si
MALTA STRAND MARINE Triq Is Sebh, Qormi Tel: +356 21 472 336 Fax: +356 21 472 338 Email: info@strandmarinemalta.com	

NORTHEN EUROPE:

DENMARK PALBY MARINE Vejle Tel: + 45 75 88 13 11 Fax: + 45 75 88 17 01 Email: palby@palby.dk	**GERMANY** LEAB Schlieswig, Busdorf Tel.: +49 4621- 36 06 67 Fax: +49 4621- 36 06 69 Email: info@leab.de
ICELAND VELASALAN 101 Reyjavik Tel : +354 580 5312 Fax : +354 580 5301 Email: Stefan@velasalan.i	**HOLLAND & BELGUIM** NAVIMO HOLLAND Schoonhoven Tel: +31 182 320 522 Fax: +31 182 320 519 Email: info@plastimo.nl
FINLAND MASTERVOLT FINLAND Raisio Tel: + 358 2 4339990 Fax: + 358 2 4350085 Email: info@mastervolt.fi	**HOLLAND** KEMPER EN VAN TWIST Dordrecht Tel: + 31 078 61 30 155 Fax: + 31 078 61 36 746 Email: jvmaaren@kvt.nl
NORWAY PROGRESS INGENIORFIRMA AS Kjeisaas Tel: + 47 22 02 79 00 Fax: + 47 22 02 79 01 Email: thomas@progressing.no	**SWEDEN** PLASTIMO NORDIC Henan Tel: + 46 304 360 60 Fax: + 46 304 307 43 Email: mikael.andersson@navimo.se

U.K PLASTIMO UK Eastleigh, Hampshire Tel: + 44 870 751 4666 Fax: + 44 870 751 1950 Email: sales@plastimo.co.uk	**U.K.** AR PEACHMENT Norfolk Tel: + 44 1603 714 077 Fax: + 44 1603 714 211 Email: kevin@peachment.co.uk

AMERICAS :

ARGENTINA BARON SRL Buenos Aires Tel: + 54 11 4580 55 56 Fax: + 54 11 47 46 16 96 Email: Admin@baron.com.ar	**CANADA** REKORD MARINE ENTERPRISES LTD Vancouver Tel: + 1604 325 52 33 Fax: + 1604 325 03 26 Email: michael@rekord-marine.com
BRAZIL SAILING PRODUCTS Rio de Janeiro Tel: + 55 21 494 7222 Fax: + 55 21 494 7223 Email: spsail@ibm.net	**U.S.A.** SCANDVIK Vero Beach, Florida Tel: + 1 561 567 28 77 Fax: + 1 561 567 91 13 Email: sales@scandvik.com

AUSTRALIA, INDIA & ASIA:

AUSTRALIA OCEANTALK Sydney Tel: + 612 9981 9500 Fax: + 612 9981 9555 Email: rk@oceantalk.com.au	**NEW ZEALAND** POWER & MARINE Wiri Auckland Tel: + 64 9 914 55 55 Fax: + 64 9 914 55 88 Email: sales.staff@powermarine.co.nz
CHINA RONSIL DEVELOPMENT Hong Kong Tel: + 852 2834 1633 Fax: + 852 2834 0201 Email: ronsil@netnavigator.com	**CHINA** HOLYLIGHT TRADING Hong Kong Tel: + 852 2543 7048 Fax: + 852 2543 6156 Email: coha@biznetvigator.com
JAPAN KAZ MARINE Yamato City, Kanagawa Tel: +81 46 268 41 01 Fax: +81 46 268 4351 Email: kazplast@olive.ocn.ne.jp	**SINGAPORE** OCEANTALK ASIA Singapore Tel: + 65 6543 4041 Fax: + 65 6543 4042 Email: lee@oceantalk.com.sg
INDIA Indo Marine Engineering Co. Pvt. Ltd. Pune 411- 026 Maharashtra Tel: +91 20 27123003 Fax: +91 20 27122295 Email: siddharth@indomarine.net	

MIDDLE EAST & AFRICA

ISRAEL YAMIT PO Box 6158 Tel Aviv Tel: + 972 3 527 1779 Fax: + 972 3 527 1031 Email: office@yamit.co.il	**SOUTH AFRICA** MANEX & POWER 5 Industry Street Paarden Eiland Tel: + 27 21 511 72 92 Fax: + 27 21 510 14 89 Email: manex@manex.co.za
EGYPT Seheemy Company Nasr City,Cairo Tel: +202 4032043\4041950 Fax: +202 4026595 E-mail : seheemy@intouch.com	

MAX POWER
THRUST IT TO THE MAX

Serial N°:

WARRANTY FORM

VERY IMPORTANT
Please complete this form and fax a copy to Max Power with a copy of the installation invoice or the invoice of the yacht/boat in order for the warranty to come into effect.

To Be Completed by Owner:

Name of Owner:…… Contact No. :……
Address: …….. E-mail: ……
Country:……Postcode: ……
Name of Skipper:…… Contact No. :……..
Signature of Owner: ……... Date: ……..

To Be Completed by Installer:

Installation Details:

Thruster Model :…… Electric/Hydraulic :……
Date of Installation :…….. Date of Launching Boat : ……...
Type and model of Boat : ……. Builder:…… Build Year: ……
Pleasure or Commercial craft?:……. Sail or Motor: …… Rig:……
Navigates at Sea or River or Canals?…… Hull construction material :……
L.O.A. :……L.W.L. :…… Beam :…… Free Board:……..
Displacement Weight at Full Load: :…… Height & Length of Superstructure:……
Tunnel Diameter, Thickness, Material & Length: ……
If Electric, Battery Type, Size & Number: ……

Installation Checks:

		Before Operating Thruster	While Operating
Thruster			
Electrical:	Voltage at Batteries	……..	…….
	Voltage at Thruster Motor	……..	……
	Charge at Alternator in Amps	……	
	Ampere in Motor Power Circuit	……..	

Mechanical: Verify if drive coupling between motor and drive leg is correctly tightened:..Yes / No
Verify if all cable connections is sufficiently tightened:……..……...Yes / No
If hydraulic verify all hydraulic connections: …….....Yes / No

Thruster installation tested and working correctly: ……Yes / No

Important: Refer to installation manual for full installation details.

Name of Installer: …… Signature:……

Please, return by fax: +39 039 2004299

TO GAIN YOUR EXTRA WARRANTY COVERAGE